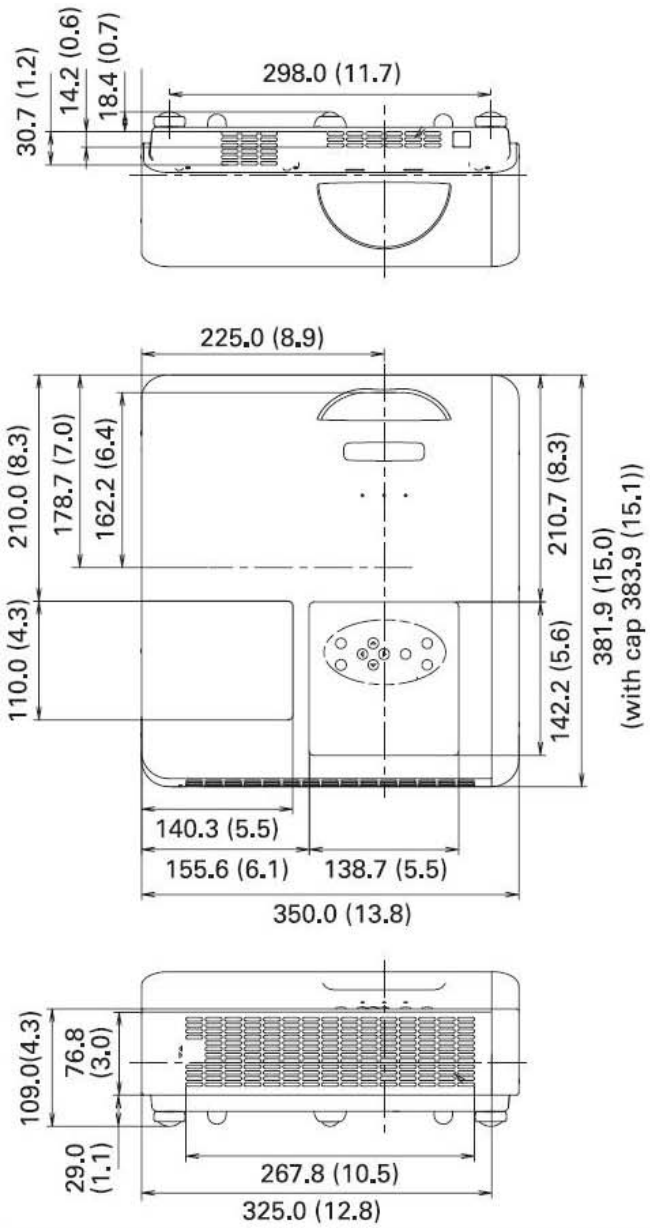

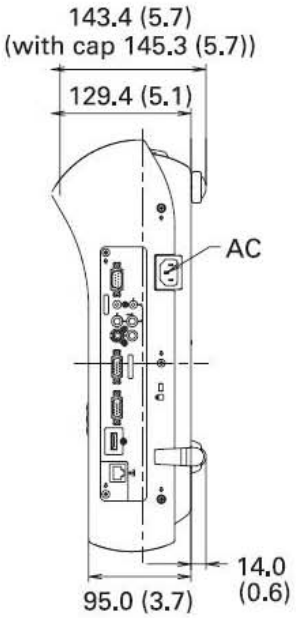

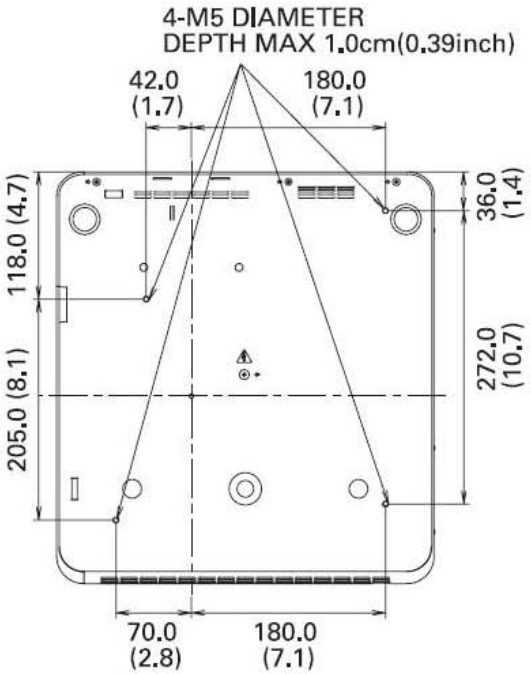

PLCWL2500 CABINET DRAWING